⚠ Linked accessories--The rotator is suitable for rotating and tipping the goods, which improves the cargo handling efficiency and also reduces the labor intensity and breakage of the goods.

⚠ The manual is intended to help the users to understand the equipment performance of the rotator more easily, and also to facilitate the user's ability to operate the rotator in accordance with the regulations.

⚠ The manual contains important recommendations for the safe, reliable, and economical use of the rotator, and the user is reminded to pay due attention to this User's Manual in order to minimize hazardous accidents, reduce maintenance costs, shorten downtime, and increase the reliability and service life of the Rotator.

⚠ The manual is a supplement to the provisions on accidents prevention and environment protection in one country and should be placed on the work site for use at any time. The personnel who are dispatched to use the rotator or whose work involves the rotator must read and obey the manual. The personnel include:

⚠ --operators: responsible for installation, trouble clearing and machine maintenance.

⚠ repair personnel: responsible for examination and repair.

⚠ transportation personnel: responsible for transport, loading and unloading.

⚠ Other than the manual and the safety regulations in any country and site, users should also obey the widely acceptable safety and operation provisions in the field.

..... 1

..... 7

..... 10

..... 12

..... 15

..... 18

..... 19

The following marks and symbols are used in this operating manual to highlight details holding special importance :

⚠ used for potential dangerous situation , to avoid injury and property damage. If not able to change the dangerous situation, can cause serious casualties.

⚠ used for used for potential danger

be reported to the officer responsible.

Working with and on the equipment may only be carried out by responsible and properly trained personnel , who must be of the legally required minimum age.

Operating temperature range of 20 to 40 , relative humidity should be less than 85% , altitude should be less than 1000 meters, wind speed does not exceed 5 m/s.

1.3.1 Operation requirements for rotator.

1.3.1.1 Wear safety uniform and fasten the safety belt.

All operators must wear proper personal protective equipment , such as labour suits , helmets , safety shoes and gloves , should follow the specified below :

Fasten the safety belt before working.

Do not wear loose , damaged or smeary clothes.

Not allowed to wear any jewelry during operation , maintenance and repair process.

Regular cleaning and maintaining rotator in accordance with the provisions of the manual , to ensure it is working normally.

1.3.1.2 Rotator operator’s requirements :

Good physical quality, strong mental state.

Have the ability to read and understand this user manual.

Fatigue and working under the influence of alcohol or drugs are not permitted.

The operator must be a qualified forklift operator who has been professionally trained and instructed.

Chatting with others is not permitted while operating the rotator.

The operator must fully understand and apply the working principle, construction and function of the Rotator. They must also know how to operate, maintain and repair the Rotator.

The operator must not load the spinner without knowing the rated load, as this will damage the machine or even cause significant danger.

The operator must take care to ensure that the work area is free of unoccupied persons.

The operator must never be allowed to leave the operator's cab when the load has not been removed from the spinner.

When the operator's field of vision is restricted or when working in a dangerous place, e.g. close to power lines or people, the operator is obliged to work under the direction of the signaling machine. This is because in such cases the operator cannot always be in the best position to be able to judge the distance and it is difficult to see the whole working situation.

Overloading can cause the forklift to tip over, resulting in damage to the forklift and possible injury or death.

1.3.2 Installation and Use

Only be allowed to use suitable transportation and lift tools with enough load force (rotator self-weight labeled in nameplate).

⚠

1.3.3 Operation

The rotator must be in

The forklift driver should take care to avoid injury to persons in the working and traveling area.

Abandon any working methods that impair the machine's stable performance.

Maximum load is the load capacity of two or more forks at the same time.

Note the load rating on the nameplate, the recommended working pressure of the system and the center distance of the load rating.

The moving, swinging and transferring parts on the rotator, due to its own squeezing, shearing and pulling action will form a hazardous factor, the operator should keep a certain safety distance from the rotator to prevent the corners of the clothes, hands and feet, hair, etc. from getting involved in the machine and causing personal injuries.

Cargo handling is allowed only when pallets, boxes, liquid containers and parcels are intact.

1.3.4 Maintenance

Re-inspection of the rotator must be carried out in accordance with the required re-inspection period or the re-inspection period given in this user manual, and this work should be carried out by a person who is responsible for this work.

Ensure that the rotator is maintained and repaired on a flat, solid foundation, ensuring that the ground is free of potholes and gullies.

When carrying out the replacement work of parts and components, attention should be paid to the firmness of the spreader in order to eliminate accidents, and only suitable lifting and loading tools without technical faults and with sufficient bearing capacity are allowed to be used, and it is prohibited to stay and work under the loaded goods.

Without the permission of the manufacturer, it is not permitted to carry out additions and modifications on the rotator that are detrimental to safety, as well as to carry out hitch welding work through the rotator.

If it is necessary to dismantle the rotator parts during assembly and comprehensive maintenance, they should be put back immediately after the assembly and maintenance work has been completed and properly tested. Spare parts must meet the manufacturer's technical specifications. This is assured by using exclusively original spare parts.

The use of spare parts must meet the technical requirements put forward by the producer, which can be guaranteed by the original spare parts of our company.

Note the following tightening torques which are valid for screws with connecting surfaces according to ISO4762 , ISO4014 , ISO4032 etc. :

Regularly check all hydraulic pipes, conduits and couplings for sealing performance and damage, and completely remove faults, cs كج

[illegible]sers mus[illegible] hydra[illegible] high press[illegible] pip[illegible] with inne[illegible] mete[illegible] (G[illegible] redu[illegible] [illegible]locking [illegible]tion, wh[illegible] automatically w[illegible]en there is a forklift truck flameo[illegible]d oth[illegible] a[illegible]ents.

Before i[illegible] the rotator, the user should [illegible]an [illegible]e f[illegible]ck and chec[illegible] its surface for a[illegible] defec[illegible], and the user should a[illegible]ether the rated [illegible]ad capacity of th[illegible] compatible with that of the forklift, and confirm the rated load capacity and the center distance of the forklift after installing the rotator.

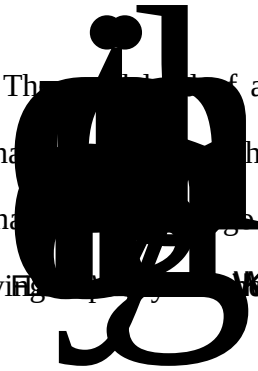

Th[illegible] a rotator is the nominal load carrying capacity given by its mecha[illegible] the determination of the rated load does not take into account the na[illegible] or the operating conditions, therefore, the combined load carryi[illegible]

confirm whether the rated pressure of the hydraulic pipeline is matched with the requirement of the hydraulic motor of the rotator, in which the rated pressure of the soft and hard pipes must be more than 28MPa; confirm whether the parameter setting of the safety valve is matched with the working pressure of the hydraulic motor (the recommended pressure is 14Mpa). . Confirm the inlet and outlet of the hydraulic pipeline to ensure that the direction of the inlet and outlet and the direction of the control lever action is the same. See the following table for the flow and pressure values of the specific hydraulic system:

Model	Pressure value bar		Flow value L/min		
			Rotary motion		
	min	max	min	recommend	max
XZ17*	35	160	19	26	38
XZ22*/30*/35*	35	160	19	38	57
XZ45/*60*	35	160	38	57	76

Description:

Less than the minimum flow rate will result in malfunctioning of the rotator.

Greater than the maximum flow rate will cause overheating, which will reduce system performance and shorten the life of the hydraulic system.

The dimensions of the forklift truck fork holders are shown in Fig. 1 (in accordance with ISO 2328-2007), and the relevant dimensional values are shown in the table below:

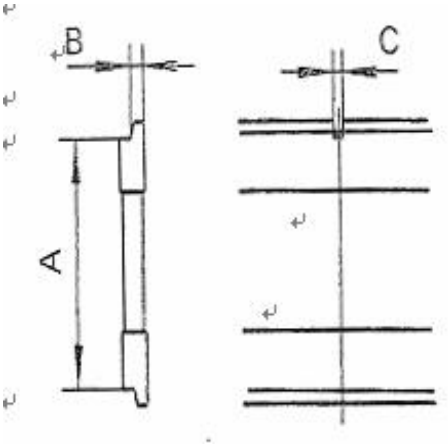

Figure 1

Installation level	A		B		C	
	min	max	min	max	min	max
	380	381	15	16	15.2	16.8
	474.5	476	20.5	21.5	18.2	19.8
	595.5	597	24.5	25.5	18.2	

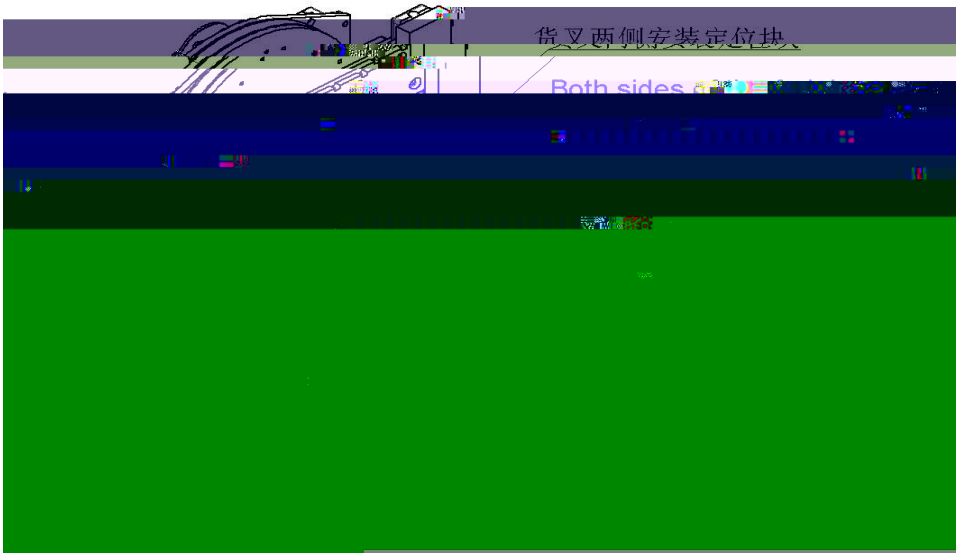

3.3 Rinse Rubber Hose.

Connect one end of the hose to the multi-way reversing valve and the other end to the pipe fitting as shown in the illustration, start the forklift and maneuver the forklift multi-way valve handle in each direction for 30 seconds in order to flush any dirt left in the hose into the forklift hydraulic tank and oil filter.

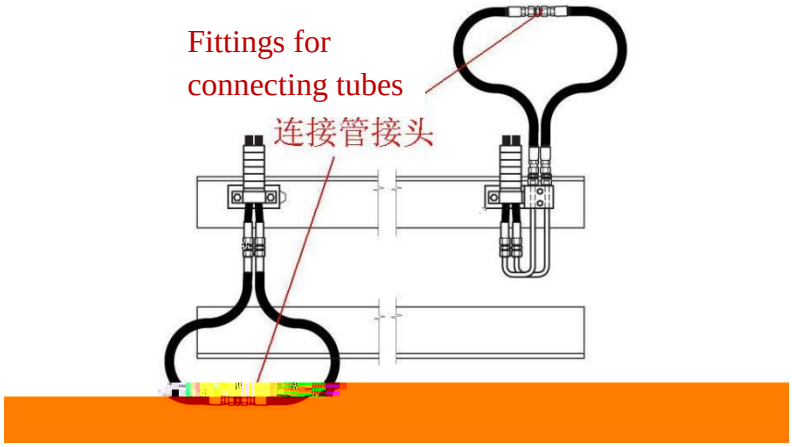

⚠ Note: The hoses must be flushed as described in 3.3 to avoid damage to the hydraulic parts of the appliance.

Rotator User

4.1.2 Check that the rotating motion of the appliance is smooth and that it does not touch or cut the hose.

4.1.3 If the appliance moves abnormally, do not operate it and report it to your supervisor.

4.2.1 The weight of the loaded goods shall not exceed the rated carrying capacity on the accessory label.

4.2.2 When rotating, the position of the goods should be centered left and right.

4.3.3 The following operations are illegal and must be prohibited:

It is prohibited to carry a person on the load that the forklift truck is clamping

Do not use the attachments for improper use;

It is prohibited to load more than the rated calibration value of the attachments;

Do not drive the forklift truck forward if the load is too large;

Do not subject the attachments to external shocks during operation;

It is prohibited to stand in the area that can be covered by the fall of the load held by the forklift truck;

It is prohibited to stop, turn, shift gears, or switch fuel for dual-fuel forklift trucks on slopes;

Prohibit hitch welding on the rotator;

Observe local traffic rules and do not operate in violation of the law;

When the forklift is switched off, drop the load on the ground and engage the manual brake at the same time;

Prohibit the loads clamped by the forklift truck from dragging on the ground; when traveling on level ground, the lowest part of the clamped load or clamp plate should be at least 50mm above the ground; when working in the field or when the ground road condition is poor, the lowest part of the clamped load should be at least 100mm above the ground;

When the attribute is faulty, it is forbidden to use it without elimination.

4.2.4 The lifting of goods should be smooth to maintain the stability of the forklift truck.

4.2.5 When operating the joystick, the movement should be continuous and smooth to avoid causing hydraulic shock and damaging the hydraulic components, and at the same time, it can avoid the stability of the forklift truck after the goods are lifted to a certain height.

4.2.6 The driver should choose the speed of the forklift reasonably according to the following conditions: the stability of the forklift itself, the size of the load, the road condition, the size of the ramp, the size of the space, the workplace with or without obstacles, the size of the wind and other factors.

4.2.7 Avoid the following operations:

The forklift truck remains at a high speed when the cargo is lifted to a higher height.

Rotating the truck after the cargo is not centered left or right.

Rotate without lifting to a certain height.

Dragging the attachments without lifting them off the ground when the load is on the ground, causing damage to the parts.

[redacted]

affect op[redacted]bility and [redacted]fety unle[redacted]en p[redacted]

obtained.

5.1.2 If [redacted]lls the atta[redacted]he fork[redacted]

through [redacted]urer, the u[redacted]equire[redacted]orklift tru[redacted]

differenti[redacted] the atta[redacted] to [redacted]xact com[redacted]

forklift/a[redacted]d capacity [redacted]d at [redacted] cargo lo[redacted]

lifted to t[redacted]height.

5.1.3 All[redacted]

5.1.4 The Attachment must be [redacted]e

[redacted]

5.5.2 Only loads within the capacity of the forklift truck are permitted to be handled.

5.5.3 The load must be adjusted when the load size is too long or too high (including multi-layer loads) æo

If the rotator rotation jams, check as follows:

2.Check whether the gears of the reducer are damaged, damaged that is, replace the gears

3. Check whether the slewing bearing gear is damaged or not, and replace the slewing bearing if damaged.



1. Check if the motor is leaking oil, replace the motor if it is leaking oil.

Thank you very much for selecting products from Anqing Liandong Engineering Trucks Attachments Co., Ltd. To fully guarantee your rights and interests, please read this statement carefully.

7.1 The quality assurance defined for the forklift attachment products manufactured by Anqing Liandong Engineering Trucks Attachments Co., Ltd. should be

(1) 24 months or 4,000 hours of product use, whichever comes first, from delivery of new products to the first carr

7.3 Notes:

(1) Anqing Liandong Engineering Trucks Attachments Co., Ltd. does not guarantee the use of the Attachment Product for special operations beyond the rated range.

(2) The warranty of Anqing Liandong Engineering Trucks Attachments Co., Ltd. does not cover wear and tear, consumption in normal use and normal or regular maintenance work.

(3) Anqing Liandong Engineering Trucks Attachments Co., Ltd. shall not guarantee anything beyond the contents of this warranty policy and the terms and conditions related to the products described in the sales contract of Anqing Liandong Engineering Trucks Attachments Co., Ltd.