The bale clamp is a special attachment to the forklift for handling bales. It is specially designed to carry materials in the paper making, chemical fiber and cotton bale businesses and is widely accepted for its ability to handle nearly any type of baled supplies like paper pulp, waste paper, cotton bales, wool, hay or industrial scrap. The bale clamps designed and produced by us, testified by the market for many years, have matured and series products are being made now.

This operating manual is designed to familiarize operators with the equipment and its intended application.

The manual contains important notes concerning safe, proper and economic working with the equipment. Strict observation of these notes will help to avoid risks, reduce repair costs and down time, and increase the reliability and useful life of the equipment.

In addition to the instructions contained in this manual, all pertinent national and local codes and regulations relating to safety and environmental protection must be observed in full. This operating manual must be kept available for ready reference at the equipmentôs place of use.

The manual must be read and followed by all persons involved in work with or on the equipment. This work includes:

ð ð Operating the equipment, including setting up for use, correcting trouble in use, collection and disposal of production scrap, cleaning and routine servicing, disposal of spent lubricants and other wastes.

ð ð Inspection, maintenance and repair

ð ð Handling

In addition to this operating manual and the safety codes and regulations in force at the place of use, standard practice relating to safe and proper working tools and machines must be observed at all times.

1 Safety 1

2 Mounting Requirements 6

3 Mounting Instructions 9

4 Operation Instructions 13

5 Maintenance Instructions 16

6 Failures Removal 17

7 Special Statement 19

The following marks and symbols are used in this operating manual to highlight details holding special importance:

ð ð Op=

cylinder below 80 , or failures may occur to the cylinder.

ð ð When wo



nual

adj ng va her s and w rk on rting

ð ð If safety devices need to be dismantled for setting up, maintenance or repair work, they must be re-installed and checked for proper function immediately on completion of the work.

Spare parts must meet the manufacturerôs technical specifications. This is assured by using exclusively original spare parts.

Note the following tightening torques which are valid for screws with connecting surfaces according to ISO4762 ISO4014 ISO4032 etc.

ð ð Work on hydraulic equipment may only be carried out by personnel specially trained and experienced in hydraulics.

ð ð All hydraulic pipes, hose lines and couplings must be inspected regularly for leaks and visible damage. All damage must be repaired immediately. Leaking oil can cause accidents and is a fire hazard.

Serious injury to persons or damage to equipment and property may be caused as a result of

ð ð Improper use of the equipment

ð ð Incorrect operation of the equipment

ð ð Inadequate maintenance and servicing

Failure to observe the safety notes contained in the operating manual can lead to injury or even death. This applies particularly to improper use of the equipment.

Persons under the influence of drugs, alcohol or medications affecting normal responses must not be allowed to perform any work with or on the machine or equipment.

The machine and equipment must not be operated in explosion-hazard areas unless expressively designed and authorized for use in such areas.

For preventions of fire, burn, electric shock, chemical hazards (toxic exhaust, etc.), risks of electromagnetic interference, noise and other vibration, please refer to the machine manual.

Before any use of the bale clamp, two hydraulic control systems and four HP oil tubes with inside diameter of 7mm(G1/4ò) min are to be furnished, with a one-way hydraulic lock installed inside the control valve to hold the bale from falling off in the event of any emergency like sudden failure of the forklift.

Before mounting the clamp, the user is advised to clean une

⚠

Before installing the hydraulic part, make sure that the hydraulic system of the assembly is the same as shown in the hydraulic diagram of the Userôs Manual, and connect the part as indicated in the diagram. Make sure that the hydraulic tube is compatible with the hydraulic cylinder of the bale clamp in terms of the rated pressure, and that the rated pressure of the flexible/rigid tubes are larger than 28MPa. Make sure that the parameter settings of the safety valve are compatible with the working pressure of the hydraulic cylinder (the recommended pressure to be used is 14MPa). Verify the inlet and outlet of the hydraulic tube and make sure that they are in the same direction as the movement of the control lever. The flow and pressure of the hydraulic system are detailed in the table below:

Model	Pressure (bar)		Flow (L/min)					
			Side shift			Clamping		
	Min	Max	Min	Recommended	Max	Min	Recommended	Max
RJ**ST	35	180	4	23	40	15	38	40

◯ Flows lower than the min can result in malfunction of the clamp.

◯ Flows higher than the max can result in overheating and thereby degrade the system performance and reduce the service life of the hydraulic system.

The dimension of the forklift carriage is shown in figure 1 below (to ISO2328-2007) and detailed in the table below:

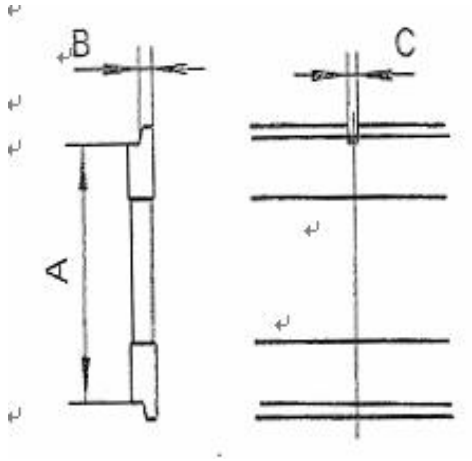

Installation grade	A	B

Figure 1

3.1 Clean up the forklift carriage and make sure it is smooth and flat on the surface and free of any damage on the central notch.

Note: Before installing the clamp on the forklift, first release the lock bolt on the lower hook and remove the lower hook

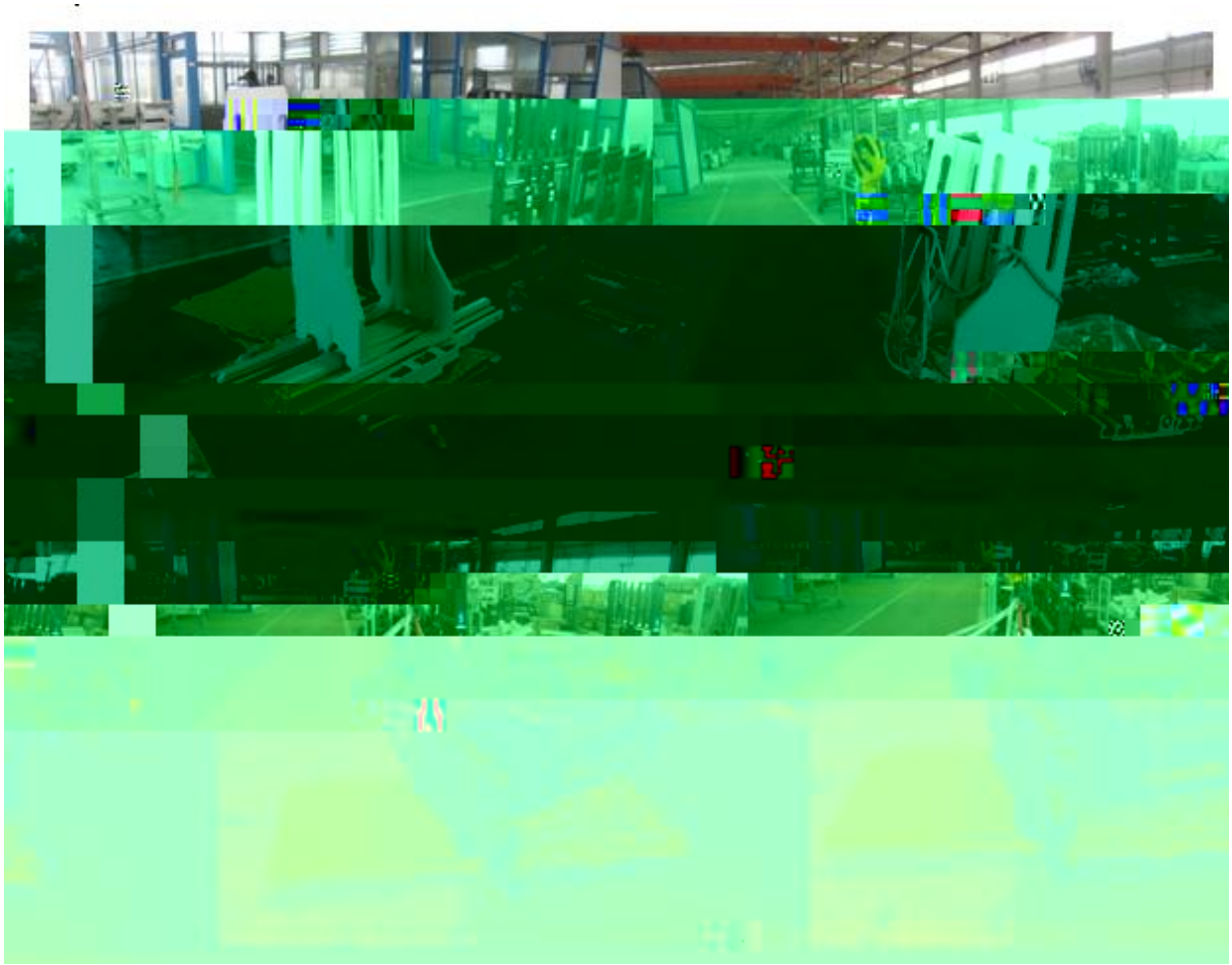

Note: You must be dismantled under the hook, you can install attachments.

3.2 Run the forklift to behind the attachment, align it, lean the gantry forward till the convex block near the upper hook is in the nearest notch between the upper crossbeam of the carriage and the convex block. Lift the carriage till it leans against the underside of the attachment

hanging board and lift the attachment 50mm off the pallet.

Note:

1 It is possible

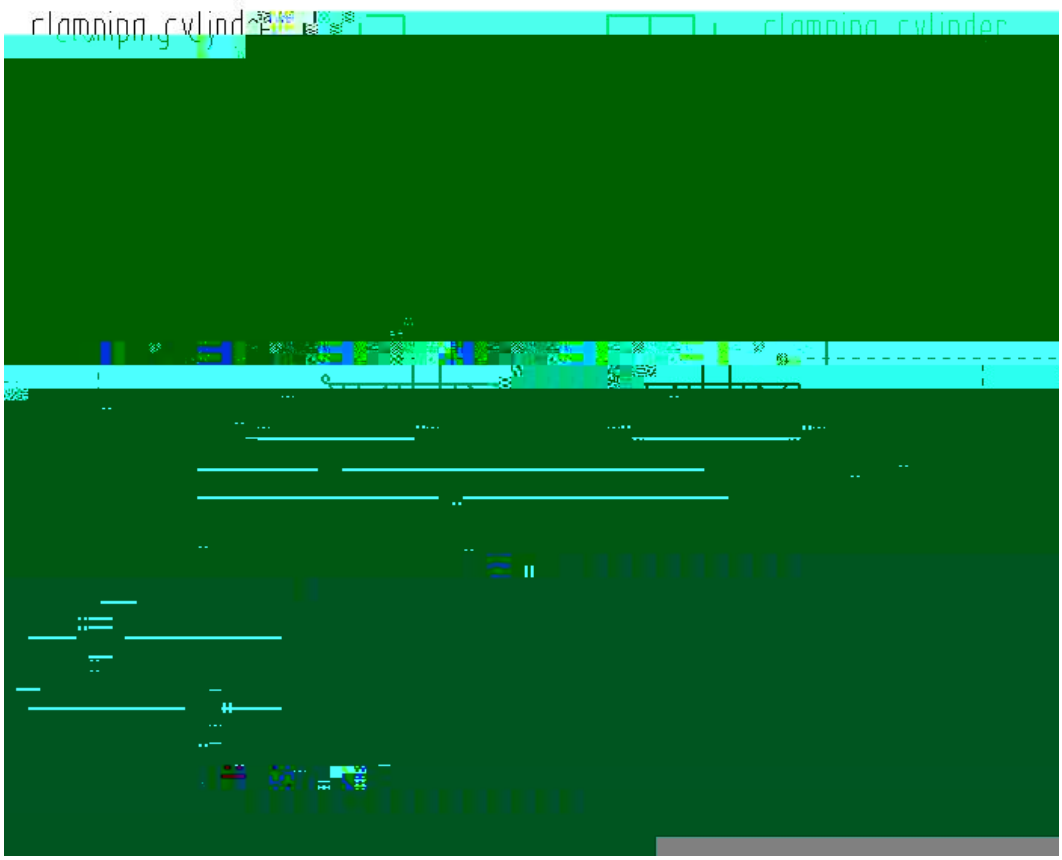

3.6 Apply a coat of lubrication grease over the surface of the four slide bars (i.e. T-bars).

⚠

Before any normal work is started, the clamp should be pu p

4.1.1 Before any operation, first operate the multi-way valve handle to make yourself intimate with the control functions of the handle and satisfy yourself that the handle movement complies with the foregoing Control Functions of the Handle.

4.1.2 Check that the attachment moves levelly and does not hit or cut on the rubber hose.

4.1.3 Do not start any operation and report to your upper leader any abnormality of the attachment.

4.1.4 Check the fixing nut of the cylinder and see if the locknut and split pin are securely fixed.

4.1.5 Check if there is any leakage at the joint or at the end of the piston rod.

4.1.6 Check the two arms work synchronously. If not, adjust the throttle valve as described below:

Note: It is crucial to remove the cylinder damper first.

1 Release the locknut on the choke valve, screw the plug to the end and turn back 3 circles.

2 Place the clamping arms to full open.

3 Clamp and hold till one of the arms runs to its full stroke and then measure the remaining stroke of the other arm.

4 For any non-synchronization in excess of 50mm, turn the cylinder that has first reached the bottom half a circle inward.

5 Repeat step (2) to step (5) till the non-synchronization is limited to within 50mm.

4.1.7 Before it holds any load, have the clamping arms work a number of dry cycles and discharge the air in the system to the oil tank.

4.2.1 Make sure the load handled is not heavier than the rated carrying capacity labeled on the attachment.

4.2.2 The [illegible] handled along the middle part.

4.2.3 The clamping pressure is normally [illegible] adjusted. Users of specific requirements

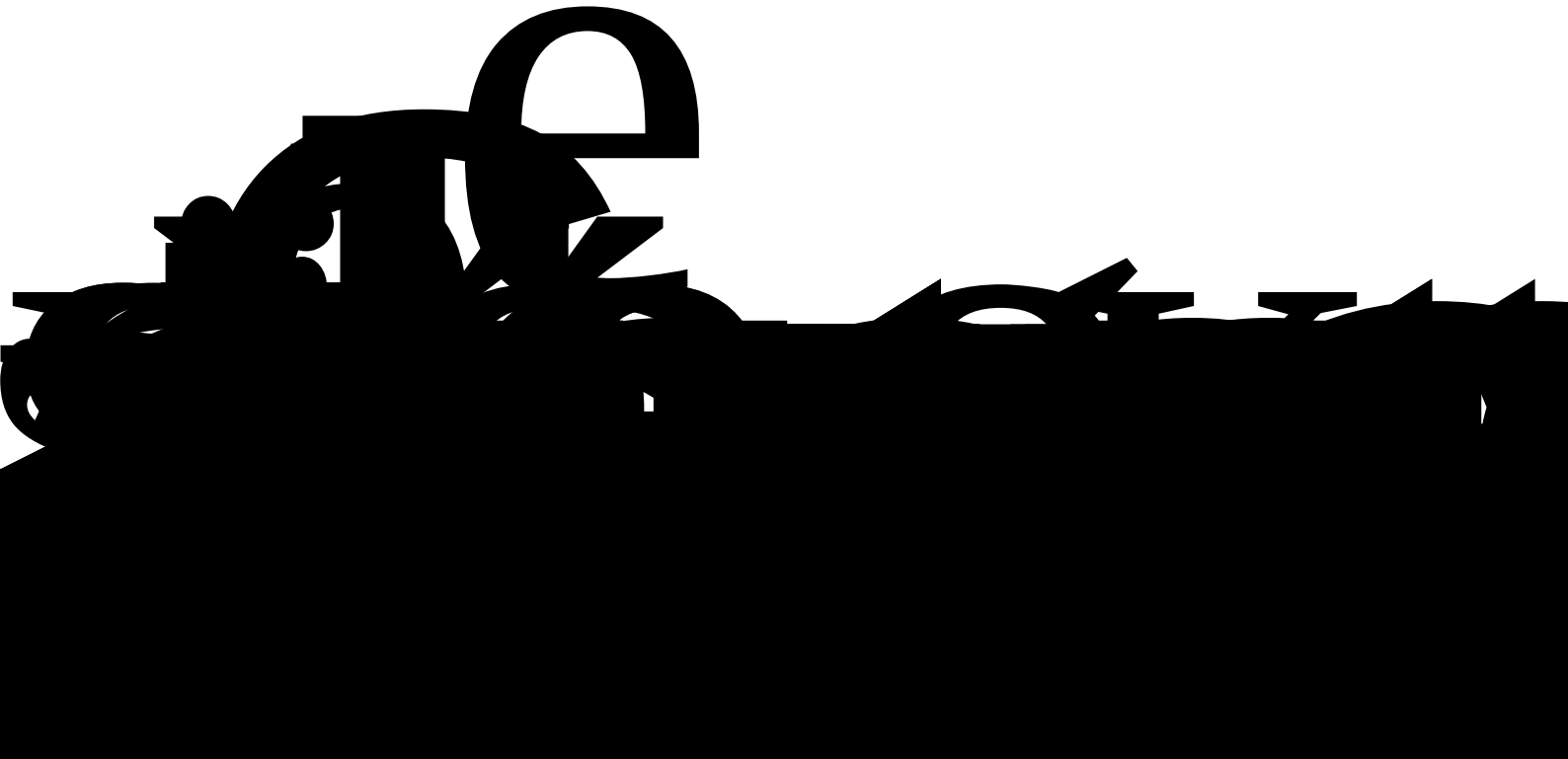

when the load is lifted to a certain height.

4.2.8 The operator should select the right speed of the forklift according to the following conditions: forklift stability, load weight, road condition, slope size, space, presence of any obstacle at the workplace or wind force and the like.

4.2.9 The following operations should be avoided:

The forklift continues to run at high speed when the bale is lifted substantially high;

The bale is not held from the middle part of the bale;

Clamp before the clamping board of the bale clamp touches the bale;

The attachment is hauled before the load placed on the ground is lifted from the ground, which may result in damage to the parts.

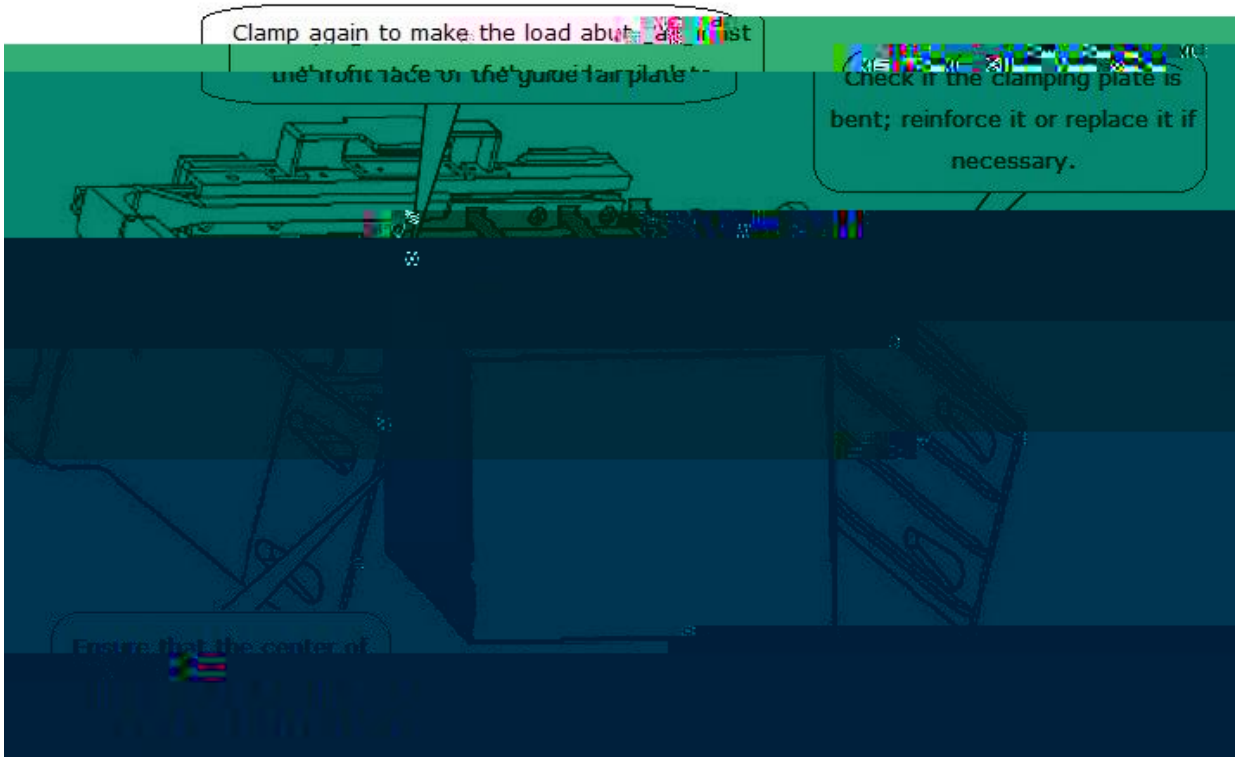

Clamp again to make the load abut against the front face of the guide rail plate.

Check if the clamping plate is bent; reinforce it or replace it if necessary.

Ensure that the center of gravity of the load does not exceed the load center of the attachment.

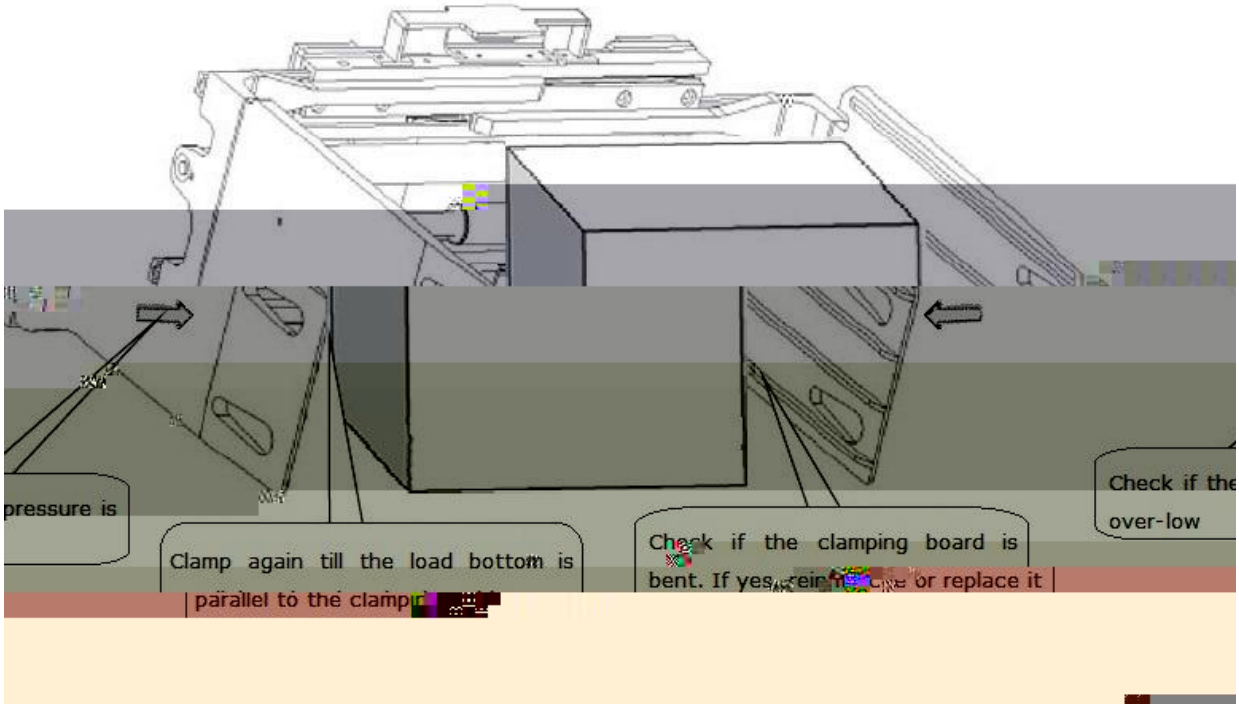

Check if the pressure is over-low.

Clamp again till the load bottom is parallel to the clamping board bottom.

Check if the clamping board is bent. If yes, reinforce or replace it.



(2) T[illegible]w[illegible]scop[illegible]of